Belt Drive Filtered Supply Fans
Models AFSI, AFSN and AFSL

Est. 1938

Models AFSI, AFSN and AFSL provide a complete roof top package that includes the blower, washable aluminum filters and removable hood. These fans are designed to supply fresh, filtered make-up air to replace air being removed by ventilation systems exhausting fumes, gases and odors from building.

AFSI

AFSN

AFSL

Construction Features

Housing
- Constructed of heavy gauge galvanized steel
- Designed for efficient airflow and maximum weather resistance
- Pre-punched mounting holes reduce installation time
- Platform constructed of heavy gauge galvanized steel

Hood
- AFSN/AFSI - Constructed of heavy gauge steel
- AFSL - Constructed of extruded aluminum louvers with mitered and welded corners
- Insulated with 1” fiberglass to prevent condensation
- Hood held in place with quick release clips allowing easy access to filters and blower
- 1" washable aluminum filters

Blower
- Double width, double inlet blowers for maximum air delivery at higher pressures
- Forward curved galvanized steel wheels dynamically balanced for vibration free operation
- Bearing rated at L_{50} life of 200,000 hours
- Open dripproof motor with sealed ball bearings designed for continuous operation
- Static free, oil and heat resistant belts
- Adjustable motor pulleys for system balancing

Disconnect Switch
- Standard NEMA 1 toggle switch mounted on blower housing sized for voltage and horsepower requirement (except explosion proof motors)

Options/Accessories

- Roof Curbs
- Dampers
- 2” Aluminum Filters
- Side Discharge (AFSN & AFSL)

U.L. 705 Listed

Consult your Acme representative for availability.

AFSL AFSN

Acme Engineering & Manufacturing Corporation certifies that Models AFSN and AFSL shown herein are licensed to bear the AMCA seal for air performance. The ratings shown are based on tests and procedures performed in accordance with AMCA Publication 211 comply with the requirements of the AMCA Certified Ratings Program.

Model AFSN also licensed to bear the AMCA seal for sound performance. The ratings shown are based on tests and procedures performed in accordance with AMCA Publication 311 and comply with the requirements of the AMCA Certified Ratings Program.

The A-weighted sound ratings shown have been calculated per AMCA Standard 301. Values shown are for [inlet Lw(A)] sound power levels for Installation Type B: Free Inlet, Ducted Outlet. Ratings do not include the effects of duct end correction.

The application of sound ratings to various fan installations produces different sound rating requirements. Also, some engineers have preferences for the type of sound rating they want to use. For these reasons, Acme has provided two different sound rating values for the noise produced by each fan. They are shown in the following values:

DECIBELS this is the sound power level in decibels (db) for each of the 8 octave bands to the reference power of 10-12 watt.

Lw(A) - is a single number sound power level in decibels adjusted to represent the affect of the “A” weighted network on each octave band.

Complete licensed sound rating data is available in Bulletin S20.

AFSI

DIMENSIONS						
Fan Model	A	B	C	R	T	Q
AFSI106	27.88	28.75	28.25	25.27	23.04	3.0
AFSI126	31.86	33.88	32.25	31.45	28.54	3.0
AFSI150	39.85	41.50	40.25	38.00	35.79	3.0
AFSI181	45.97	45.75	46.44	38.00	35.79	3.0
AFSI200	55.96	53.55	56.44	45.11	42.76	3.0

Dimensions are shown in inches.

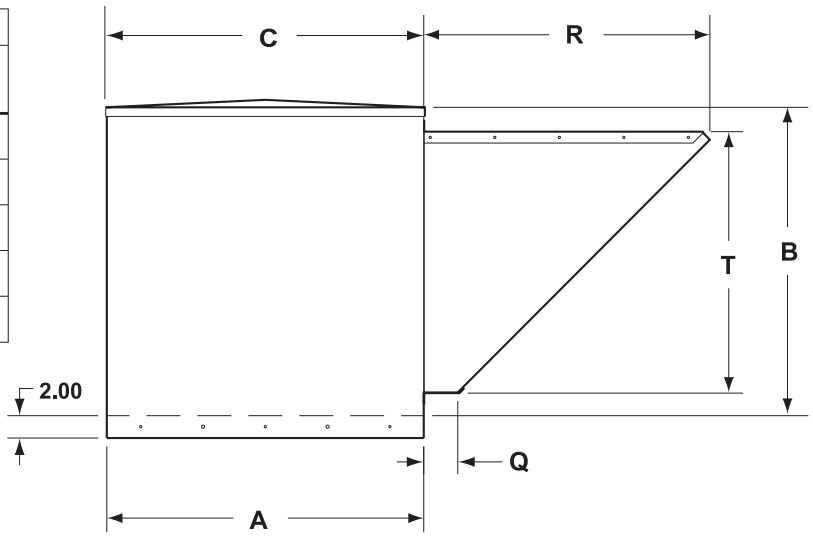

AFSN

DIMENSIONS				
Fan Model	A	B	C	E
AFSN106	27.87	26.70	39.00	11.68
AFSN126	31.86	35.15	44.00	16.43
AFSN150	39.85	39.45	52.00	18.46
AFSN181	45.97	50.16	61.36	20.20
AFSN200	55.96	58.22	77.49	28.97

Dimensions are shown in inches.

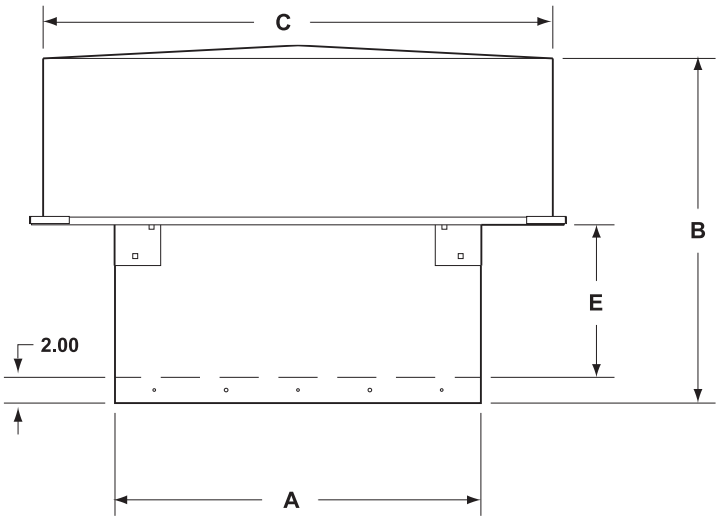

AFSL

DIMENSIONS				
Fan Model	A	B	C	E
AFSL106	27.87	27.04	35.63	11.69
AFSL126	31.86	36.09	39.63	16.57
AFSL150	39.85	40.25	47.63	18.68
AFSL181	45.97	53.10	53.79	20.80
AFSL200	55.96	61.16	63.91	31.57

Dimensions are shown in inches.

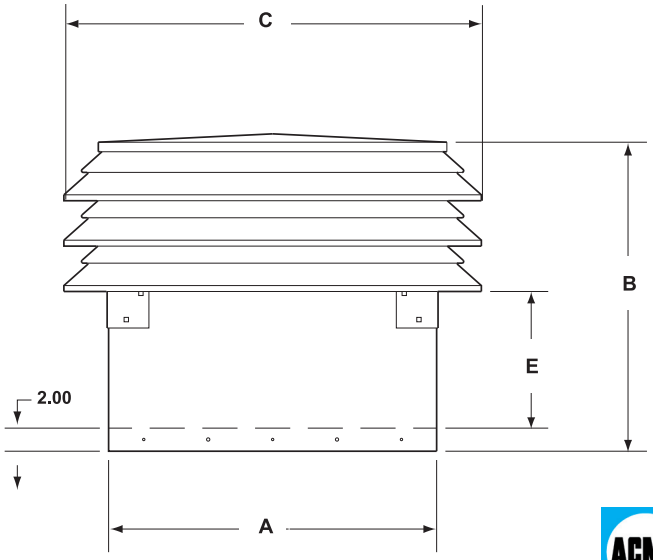

AFSI106

PERFORMANCE DATA

Fan Size Hp	CFM	.000" RPM BHP	.000" RPM $L_{WO}A$	.125" RPM BHP	.125" RPM $L_{WO}A$	.250" RPM BHP	.250" RPM $L_{WO}A$	.375" RPM BHP	.375" RPM $L_{WO}A$	.500" RPM BHP	.500" RPM $L_{WO}A$	.625" RPM BHP	.625" RPM $L_{WO}A$	.750" RPM BHP	.750" RPM $L_{WO}A$	.875" RPM BHP	.875" RPM $L_{WO}A$	1.000" RPM BHP	1.000" RPM $L_{WO}A$	1.125" RPM BHP	1.125" RPM $L_{WO}A$	1.250" RPM BHP	1.250" RPM $L_{WO}A$	1.375" RPM BHP	1.375" RPM $L_{WO}A$	1.500" RPM BHP	1.500" RPM $L_{WO}A$
106E .25	800			429																							
				0.05	69																						
	1000			464		587																					
				0.08	68	0.12	68																				
	1200			505		618		716																			
				0.12	68	0.17	68	0.22	69																		
	1400	464		557		653		745		829																	
		0.13	69	0.17	68	0.23	69	0.28	70	0.34	72																
	1600	531		611		694		780		858		931		1000													
		0.19	70	0.24	70	0.29	71	0.36	72	0.42	73	0.49	74	0.56	75												
	1800	597		666		741		817		892		961		1026		1089											
		0.27	72	0.32	72	0.38	73	0.45	74	0.53	75	0.60	76	0.67	76	0.75	76										
106F .33	1900	630		696		767		838		910		978		1040		1102		1162									
		0.32	73	0.37	73	0.43	74	0.50	74	0.59	75	0.66	76	0.73	77	0.81	77	0.90	77								
106G .50	2000	663		726		793		859		928		995		1057		1115		1174		1230							
		0.37	74	0.43	74	0.49	75	0.56	75	0.65	76	0.73	77	0.81	77	0.88	77	0.97	78	1.06	78						
	2100	696		757		820		881		948		1013		1074		1132		1187		1243		1296					
		0.43	75	0.49	75	0.55	76	0.62	76	0.71	77	0.81	77	0.89	78	0.96	78	1.05	78	1.14	79	1.24	79				
	2200	729		788		847		906		969		1030		1092		1149		1202		1256		1308		1359			
		0.49	76	0.56	76	0.62	77	0.69	77	0.78	78	0.88	78	0.97	78	1.05	79	1.13	79	1.23	79	1.33	80	1.42	80		
106H .75	2300	762		818		874		932		990		1050		1109		1166		1219		1269		1321		1371		1419	
		0.56	77	0.63	77	0.70	78	0.77	78	0.85	78	0.96	78	1.06	79	1.15	79	1.23	79	1.32	80	1.42	80	1.52	81	1.62	81
	2400	795		850		901		958		1011		1071		1127		1183		1236		1286		1334		1384			
		0.64	78	0.71	78	0.78	79	0.86	79	0.93	79	1.04	79	1.15	79	1.25	80	1.34	80	1.43	80	1.51	81	1.62	81		
	2500	829		881		929		985		1036		1092		1147		1201		1254		1303		1351					
		0.72	79	0.80	79	0.87	80	0.95	80	1.02	80	1.13	80	1.24	80	1.35	80	1.45	81	1.54	81	1.63	81				
	2600	862		912		958		1012		1062		1113		1167		1219		1271									
		0.81	80	0.89	80	0.96	81	1.05	80	1.12	80	1.22	80	1.34	80	1.46	81	1.56	81								
106J 1.00	2800	928		975		1018		1066		1114		1160		1209													
		1.02	82	1.10	82	1.18	82	1.26	82	1.35	82	1.43	81	1.55	82												
106K 1.50	3000	994		1038		1079		1120		1167																	
		1.25	84	1.34	83	1.42	83	1.51	83	1.61	83																
	3200	1061		1102																							
		1.52	85	1.61	85																						

Fan Model	HP	RPM Range	Est. Unit Wt. lbs.	Est. Ship Wt. lbs.
106E	.25	429-716	125	189
106F	.33	630-829	127	191
106G	.50	663-931	130	194
106H	.75	762-1102	135	199
106J	1.00	912-1230	142	206
106K	1.50	994-1419	159	223

AFSI126

PERFORMANCE DATA

Fan Size HP	CFM	.000" RPM BHP	.000" RPM $L_{WO}A$	.125" RPM BHP	.125" RPM $L_{WO}A$	.250" RPM BHP	.250" RPM $L_{WO}A$	.375" RPM BHP	.375" RPM $L_{WO}A$	.500" RPM BHP	.500" RPM $L_{WO}A$	.625" RPM BHP	.625" RPM $L_{WO}A$	.750" RPM BHP	.750" RPM $L_{WO}A$	.875" RPM BHP	.875" RPM $L_{WO}A$	1.000" RPM BHP	1.000" RPM $L_{WO}A$	1.125" RPM BHP	1.125" RPM $L_{WO}A$	1.250" RPM BHP	1.250" RPM $L_{WO}A$	1.500" RPM BHP	1.500" RPM $L_{WO}A$	1.625" RPM BHP	1.625" RPM $L_{WO}A$	1.750" RPM BHP	1.750" RPM $L_{WO}A$	1.875" RPM BHP	1.875" RPM $L_{WO}A$
126F .33	1400					470		555																							
						0.15	66	0.20	67																						
	1600					488		567		640																					
						0.19	67	0.25	67	0.30	68																				
	1800					509		581		652		716																			
						0.24	67	0.30	68	0.36	69	0.43	70																		
	2000					533		601		665		728		785																	
						0.30	68	0.36	68	0.43	69	0.50	70	0.57	71																
	2200			490		560		622		683		741		798		850		903													
				0.30	69	0.37	69	0.44	69	0.51	70	0.59	71	0.67	72	0.74	72	0.83	73												
126G .50	2400			522		587		647		704		758		812		863		912		960											
				0.37	70	0.45	70	0.52	70	0.60	71	0.69	72	0.77	72	0.86	73	0.94	74	1.02	75										
	2600	496		554		615		673		725		778		827		877		925		971		1014									
		0.39	71	0.46	71	0.54	71	0.62	71	0.70	72	0.79	72	0.88	73	0.98	74	1.07	75	1.16	75	1.24	76								
	2800	534		588		645		699		750		799		848		893		939		984		1027		1109		1151					
		0.49	72	0.56	72	0.65	72	0.73	72	0.82	73	0.91	73	1.01	74	1.11	75	1.21	75	1.31	76	1.40	77	1.60	78	1.72	79				
126H .75	3000	572		623		676		727		777		822		868		913		955		998		1041		1121		1158		1197		1237	
		0.61	73	0.68	73	0.77	74	0.86	74	0.95	74	1.05	74	1.15	75	1.26	76	1.36	76	1.47	77	1.57	78	1.78	79	1.88	80	1.99	80	2.12	80
	3200	611		659		707		756		803		848		890		934		975		1015		1055		1134		1172		1208			
		0.74	75	0.82	75	0.91	75	1.00	75	1.10	75	1.20	76	1.30	76	1.42	77	1.53	77	1.64	78	1.75	78	1.98	80	2.09	81	2.19	80		
126J 1.00	3600	687		730		771		817		858		901		941		979		1017		1056		1093									
		1.05	78	1.14	77	1.23	77	1.34	78	1.44	78	1.56	78	1.68	78	1.79	79	1.90	79	2.03	79	2.16	80								
126K 1.50	4000	763		803		839		879		919		956		995																	
		1.44	80	1.54	80	1.64	80	1.76	80	1.88	80	1.99	80	2.12	81																
126L 2.00	4400	839		876		909																									
		1.91	82	2.03	82	2.14	82																								
	4600	878																													
		2.18	83																												

Fan Model	HP	RPM Range	Est. Unit Wt. lbs.	Est. Ship Wt. lbs.
126F	.33	470-652	170	244
126G	.50	496-728	173	247
126H	.75	572-850	178	252
126J	1.00	687-960	185	259
126K	1.50	730-1109	202	276
126L	2.00	839-1237	207	281

The AMCA Certified Ratings Seal for Sound and Air Performance does not apply to model AFSI. Values shown are for outlet $L_{WO}A$ sound power levels for Installation Type B: Free Inlet, Ducted Outlet. Ratings include the effects of duct end correction. Performance shown is for installation type B: Free inlet, Ducted outlet. Performance ratings include the effects of filters in the airstream. Power rating (BHP) does not include drive losses. **Motors and drives are not mounted and are shipped in separate cartons.**

AFSI150

PERFORMANCE DATA

Fan Size HP	CFM	Static Pressure .000" RPM BHP	.000" RPM $L_{WO}A$	.125" RPM BHP	.125" RPM $L_{WO}A$	.250" RPM BHP	.250" RPM $L_{WO}A$	.375" RPM BHP	.375" RPM $L_{WO}A$	.500" RPM BHP	.500" RPM $L_{WO}A$	.625" RPM BHP	.625" RPM $L_{WO}A$	.750" RPM BHP	.750" RPM $L_{WO}A$	.875" RPM BHP	.875" RPM $L_{WO}A$	1.000" RPM BHP	1.000" RPM $L_{WO}A$	1.125" RPM BHP	1.125" RPM $L_{WO}A$	1.250" RPM BHP	1.250" RPM $L_{WO}A$	1.375" RPM BHP	1.375" RPM $L_{WO}A$	1.500" RPM BHP	1.500" RPM $L_{WO}A$	1.625" RPM BHP	1.625" RPM $L_{WO}A$	1.750" RPM BHP	1.750" RPM $L_{WO}A$
150G .50	2000					351																									
						0.19	63																								
	2500					368		431																							
						0.28	63	0.36	64																						
	3000	332		368		404		448		500		550																			
		0.32	67	0.38	66	0.43	66	0.50	66	0.59	66	0.69	68																		
	3500	387		419		450		479		518		563		608		649															
		0.51	70	0.58	70	0.64	70	0.70	69	0.79	68	0.89	69	1.01	70	1.11	71														
150H .75	4000	442		470		497		524		549		583		623		663		701		737		775									
		0.76	74	0.84	73	0.91	73	0.99	73	1.05	71	1.15	71	1.27	71	1.39	72	1.52	73	1.64	75	1.78	76								
150J 1.00	4200	464		491		516		543		567		592		631		668		707		743		777		813							
		0.88	75	0.97	75	1.04	74	1.12	75	1.19	73	1.26	72	1.39	73	1.51	73	1.65	74	1.79	75	1.91	77	2.06	78						
	4400	486		512		536		561		585		607		640		676		712		748		782		814		849					
		1.02	76	1.10	76	1.18	76	1.26	76	1.34	75	1.41	74	1.52	74	1.65	74	1.79	74	1.93	75	2.07	77	2.20	78	2.35	80				
150K 1.50	4600	508		533		557		580		603		625		648		685		719		753		787		820		851		883			
		1.16	77	1.25	77	1.34	77	1.42	77	1.50	77	1.58	75	1.65	75	1.80	75	1.93	75	2.08	76	2.23	77	2.38	79	2.51	80	2.67	82		
	4800	530		555		577		599		622		643		664		693		727		759		793		825		856		886		917	
		1.32	78	1.42	78	1.50	78	1.59	78	1.68	78	1.76	77	1.83	76	1.95	76	2.10	76	2.24	77	2.40	78	2.55	79	2.70	81	2.85	82	3.01	82
	5000	552		576		597		618		641		662		681		701		735		767		798		831		861		891		920	
		1.49	79	1.59	79	1.69	79	1.78	79	1.87	79	1.95	78	2.03	78	2.11	77	2.27	77	2.42	78	2.56	79	2.73	79	2.89	81	3.05	82	3.20	83
150L 2.00	5200	575		597		618		638		659		680		699		718		744		776		806		836		867		897			
		1.68	80	1.78	80	1.88	80	1.97	80	2.07	80	2.16	80	2.24	79	2.33	78	2.45	78	2.61	79	2.76	79	2.92	80	3.09	81	3.26	82		
	5400	597		618		639		658		678		698		718		736		754		784		814		843		872					
		1.88	81	1.99	81	2.09	81	2.19	81	2.29	81	2.38	81	2.47	80	2.56	80	2.64	79	2.80	80	2.97	80	3.13	81	3.29	81				
	5600	619		640		659		678		697		717		736		754		771		792		822									
		2.09	82	2.21	82	2.31	82	2.42	82	2.52	82	2.62	82	2.72	82	2.81	81	2.89	81	3.00	81	3.18	81								
150M 3.00	5800	641		661		680		699		717		736		754		772		789		806											
		2.33	82	2.44	82	2.56	82	2.66	82	2.77	83	2.87	83	2.97	83	3.07	82	3.16	82	3.25	82										
	6000	663		683		701		719		736		755		773																	
		2.58	83	2.70	83	2.81	83	2.92	83	3.03	83	3.14	84	3.25	84																
	6200	685		704		722		740																							
		2.84	84	2.97	84	3.09	84	3.20	84																						

Fan Model	HP	RPM Range	Est. Unit Wt. lbs.	Est. Ship Wt. lbs.
150G	.50	332-448	252	346
150H	.75	419-518	257	351
150J	1.00	464-608	264	358
150K	1.50	508-737	281	375
150L	2.00	575-814	286	380
150M	3.00	640-920	294	388

AFSI181

PERFORMANCE DATA

Fan Size HP	CFM	Static Pressure .000" RPM BHP	.000" RPM $L_{WO}A$	.125" RPM BHP	.125" RPM $L_{WO}A$	.250" RPM BHP	.250" RPM $L_{WO}A$	.375" RPM BHP	.375" RPM $L_{WO}A$	.500" RPM BHP	.500" RPM $L_{WO}A$	.625" RPM BHP	.625" RPM $L_{WO}A$	.750" RPM BHP	.750" RPM $L_{WO}A$	.875" RPM BHP	.875" RPM $L_{WO}A$	1.000" RPM BHP	1.000" RPM $L_{WO}A$	1.250" RPM BHP	1.250" RPM $L_{WO}A$	1.500" RPM BHP	1.500" RPM $L_{WO}A$	1.750" RPM BHP	1.750" RPM $L_{WO}A$	2.000" RPM BHP	2.000" RPM $L_{WO}A$	2.250" RPM BHP	2.250" RPM $L_{WO}A$	2.500" RPM BHP	2.500" RPM $L_{WO}A$
181J 1.00	3000							363		412																					
								0.38	73	0.47	73																				
	3500							375		420		462																			
								0.49	73	0.59	74	0.69	74																		
	4000							388		432		472		509		545															
								0.63	74	0.74	74	0.86	74	0.97	74	1.09	75														
	4500					354		401		445		484		519		554		585													
						0.66	74	0.79	74	0.92	74	1.05	75	1.18	75	1.31	76	1.43	76												
	5000					377		413		458		497		532		564		596		654											
						0.85	75	0.97	75	1.12	75	1.27	75	1.41	76	1.55	77	1.70	77	1.98	79										
	5500			373		400		433		470		510		545		577		607		664		717									
				0.99	76	1.08	76	1.20	76	1.35	76	1.52	76	1.68	77	1.84	78	1.99	78	2.31	79	2.62	80								
181K 1.50	6000	378		403		425		455		484		522		558		590		620		675		727		775		824					
		1.17	78	1.27	78	1.35	78	1.49	78	1.61	77	1.80	77	1.98	78	2.16	79	2.34	79	2.67	80	3.02	81	3.35	82	3.72	82				
	6500	410		433		453		479		507		535		570		603		633		687		737		786		831		874			
		1.49	79	1.60	79	1.69	79	1.81	79	1.96	79	2.11	79	2.32	79	2.51	80	2.70	81	3.08	81	3.44	82	3.82	82	4.18	83	4.55	84		
181L 2.00	7000	442		463		482		502		529		554		583		616		646		701		750		796		841		883		923	
		1.86	81	1.98	81	2.08	81	2.18	81	2.35	81	2.50	80	2.68	81	2.90	81	3.11	82	3.53	82	3.93	83	4.32	83	4.73	84	5.12	85	5.50	85
181M 3.00	7500	473		493		512		529		552		577		600		628		658		714		763		808		851					
		2.29	82	2.42	82	2.53	82	2.63	82	2.79	82	2.96	82	3.11	82	3.32	83	3.56	83	4.00	83	4.45	84	4.88	84	5.30	85				
	8000	505		523		541		558		576		600		622		644		671		727		777		822							
		2.78	84	2.92	83	3.04	83	3.15	84	3.27	84	3.46	84	3.64	84	3.80	84	4.04	84	4.54	84	5.01	85	5.48	85						
181N 5.00	8500	536		554		571		586		602		623		645		666		686		739											
		3.34	85	3.48	85	3.61	85	3.73	85	3.84	85	4.03	85	4.22	86	4.41	85	4.58	85	5.11	85										
	9000	568		584		600		616		630		646		668		688		708													
		3.96	86	4.11	86	4.25	86	4.38	86	4.50	86	4.65	87	4.86	87	5.07	86	5.26	86												
	9500	599		615		630		645		659		672																			
		4.66	87	4.82	87	4.97	87	5.11	88	5.24	87	5.36	88																		
	10000	631																													
		5.44	89																												

Fan Model	HP	RPM Range	Est. Unit Wt. lbs.	Est. Ship Wt. lbs.
181J	1.00	363-545	397	519
181K	1.50	378-585	414	536
181L	2.00	442-654	419	541
181M	3.00	473-727	427	549
181N	5.00	536-923	471	593

The AMCA Certified Ratings Seal for Sound and Air Performance does not apply to model AFSI. Values shown are for outlet $L_{WO}A$ sound power levels for Installation Type B: Free Inlet, Ducted Outlet. Ratings include the effects of duct end correction. Performance shown is for installation type B: Free inlet, Ducted outlet. Performance ratings include the effects of filters in the airstream. Power rating (BHP) does not include drive losses. **Motors and drives are not mounted and are shipped in separate cartons.**

AFSI200

PERFORMANCE DATA

Fan Size HP	CFM	Static Pressure .000" RPM BHP	.000" RPM $L_{wo}A$	.125" RPM BHP	.125" RPM $L_{wo}A$	.250" RPM BHP	.250" RPM $L_{wo}A$	.375" RPM BHP	.375" RPM $L_{wo}A$	.500" RPM BHP	.500" RPM $L_{wo}A$	.625" RPM BHP	.625" RPM $L_{wo}A$	.750" RPM BHP	.750" RPM $L_{wo}A$	1.000" RPM BHP	1.000" RPM $L_{wo}A$	1.250" RPM BHP	1.250" RPM $L_{wo}A$	1.500" RPM BHP	1.500" RPM $L_{wo}A$	1.750" RPM BHP	1.750" RPM $L_{wo}A$	2.000" RPM BHP	2.000" RPM $L_{wo}A$	2.250" RPM BHP	2.250" RPM $L_{wo}A$	2.500" RPM BHP	2.500" RPM $L_{wo}A$	2.750" RPM BHP	2.750" RPM $L_{wo}A$
200K 1.50	4500											0.90	436 74																		
	5000									0.89	406 73	1.04	444 74	1.21	479 76																
	5500									1.05	417 74	1.21	453 75	1.38	487 76	1.74	549 79														
	6000									1.22	427 75	1.40	463 76	1.58	495 77	1.98	556 80	2.34	611 82												
	6500									1.43	440 76	1.61	473 77	1.81	505 78	2.20	564 81	2.62	619 83	3.03	668 85										
	7000							1.46	419 76	1.66	453 77	1.86	485 78	2.06	516 79	2.47	573 82	2.91	627 84	3.36	676 85	3.81	722 87								
200L 2.00	7500							1.72	436 77	1.91	466 78	2.13	498 79	2.34	527 80	2.78	584 83	3.22	635 85	3.71	684 86	4.19	729 88	4.67	772 89						
	8000					1.80	423 79	2.01	453 79	2.20	481 79	2.42	511 80	2.65	540 81	3.11	594 84	3.59	645 85	4.06	692 87	4.59	737 88	5.10	779 89	5.61	819 90				
	8500			1.90	413 79	2.10	441 80	2.33	471 80	2.53	498 81	2.74	524 82	3.00	553 83	3.47	605 83	3.98	655 86	4.48	701 87	5.00	745 89	5.56	787 89	6.11	827 91	6.64	865 91		
200M 3.00	9000			2.23	433 81	2.44	460 81	2.68	489 82	2.90	515 82	3.11	539 83	3.36	566 84	3.88	617 86	4.39	665 87	4.94	711 88	5.46	753 88	6.03	795 90	6.62	835 91	7.20	872 92	7.77	908 92
	9500	2.35	425 82	2.60	454 82	2.82	480 83	3.06	507 83	3.31	532 84	3.54	556 84	3.76	579 85	4.32	630 87	4.84	676 87	5.42	721 88	5.98	763 88	6.53	803 90	7.14	842 91	7.76	880 92		
	10000	2.75	448 83	3.01	475 83	3.24	501 84	3.48	525 85	3.75	550 85	4.00	573 86	4.23	595 86	4.79	643 87	5.36	688 88	5.92	731 89	6.53	774 89	7.12	813 90	7.69	850 91				
200N 5.00	12000	4.74	537 88	5.06	561 89	5.36	583 89	5.64	603 90	5.91	623 90	6.24	644 90	6.55	665 89	7.14	703 89	7.73	740 90												
200P 7.50	14000	7.53	627 92	7.91	647 93																										

Fan Model	HP	RPM Range	Est. Unit Wt. lbs.	Est. Ship Wt. lbs.
200K	1.50	406-495	610	754
200L	2.00	413-564	615	759
200M	3.00	425-668	623	767
200N	5.00	537-779	667	811
200P	7.50	603-908	686	830

The AMCA Certified Ratings Seal for Sound and Air Performance does not apply to model AFSI. Values shown are for outlet $L_{wo}A$ sound power levels for Installation Type B: Free Inlet, Ducted Outlet. Ratings include the effects of duct end correction. Performance shown is for installation type B: Free inlet, Ducted outlet. Performance ratings include the effects of filters in the airstream. Power rating (BHP) does not include drive losses. **Motors and drives are not mounted and are shipped in separate cartons.**

AFSN/AFSL106

PERFORMANCE DATA

Fan Size HP	CFM	.000" RPM	BHP	LwoA♦	.125" RPM	BHP	LwoA♦	.250" RPM	BHP	LwoA♦	.375" RPM	BHP	LwoA♦	.500" RPM	BHP	LwoA♦	.625" RPM	BHP	LwoA♦	.750" RPM	BHP	LwoA♦	.875" RPM	BHP	LwoA♦	1.000" RPM	BHP	LwoA♦	1.125" RPM	BHP	LwoA♦	1.250" RPM	BHP	LwoA♦	1.375" RPM	BHP	LwoA♦	1.500" RPM	BHP	LwoA♦	1.750" RPM	BHP	LwoA♦	1.875" RPM	BHP	LwoA♦
		Static Pressure																																												
106E .25	600				362																																									
					0.03	71																																								
	800				384			509																																						
					0.05	71		0.08	70																																					
	1000				417			526			624																																			
					0.07	70		0.11	69		0.15	68																																		
	1200	356			456			554			642			724			800																													
		0.07	70		0.10	70		0.15	69		0.19	69		0.24	69		0.30	71																											
	1400	415			501			587			667			743			814			882																									
		0.11	70		0.15	70		0.19	70		0.25	70		0.30	71		0.36	72		0.42	73																							
	1600	474			548			626			698			768			834			898			958			1017			1073																
		0.16	71		0.20	71		0.25	71		0.31	71		0.37	72		0.44	73		0.50	74		0.56	76		0.64	76		0.71	76															
	1800	534			596			668			735			799			860			918			977			1033			1085			1138			1188										
		0.23	72		0.27	72		0.33	73		0.39	73		0.46	74		0.53	74		0.60	75		0.67	76		0.74	77		0.81	77		0.90	77		0.98	78									
106F .33	2000	593			649			714			775			834			891			947			998			1052			1104			1154			1201			1248			1339				
		0.32	74		0.36	74		0.42	74		0.49	75		0.56	75		0.63	76		0.71	77		0.79	77		0.87	77		0.95	78		1.03	78		1.10	79		1.20	79		1.39	81			
	2100	622			677			737			795			853			907			962			1013			1062			1114			1163			1210			1255			1345			1387	
		0.37	75		0.42	75		0.48	75		0.54	76		0.61	76		0.69	77		0.77	77		0.85	78		0.93	78		1.02	78		1.10	79		1.19	79		1.27	80		1.46	81		1.56	82
106G .50	2200	652			704			760			817			873			925			978			1029			1077			1123			1173			1220			1265			1351			1394	
		0.42	76		0.47	76		0.53	76		0.60	77		0.68	77		0.75	78		0.84	78		0.92	78		1.01	78		1.09	79		1.18	79		1.27	80		1.36	80		1.54	82		1.64	82
	2400	711			760			808			863			913			964			1011			1060			1107			1152			1195			1239			1284							
		0.55	78		0.60	78		0.66	78		0.74	78		0.81	79		0.90	79		0.98	79		1.07	79		1.17	79		1.26	80		1.35	80		1.45	80		1.54	81						
106H .75	2600	771			816			856			909			957			1004			1050			1094			1138			1183			1225			1265										
		0.69	79		0.76	79		0.81	80		0.90	80		0.98	81		1.06	81		1.16	81		1.24	80		1.34	80		1.44	81		1.54	81		1.64	81									
106J 1.00	2800	830			872			911			956			1003			1046			1090			1133			1173			1214																
		0.87	81		0.94	81		1.00	81		1.08	82		1.17	82		1.25	82		1.35	82		1.45	82		1.54	82		1.64	82															
	3000	889			929			965			1004			1049			1091			1131																									
		1.07	83		1.14	83		1.21	83		1.28	83		1.38	83		1.48	83		1.56	83																								
106K 1.50	3200	948			986			1020			1053			1096																															
		1.29	85		1.37	84		1.45	84		1.52	84		1.62	84																														
	3400	1008			1043																																								
		1.55	86		1.64	85																																							

Fan Model	HP	RPM Range	Est. Unit Wt. lbs.	Est. Ship Wt. lbs.
106E	.25	356-724	116	206
106F	.33	593-814	122	212
106G	.50	652-898	125	215
106H	.75	760-1085	130	220
106J	1.00	830-1201	137	227
106K	1.50	929-1394	154	244

AFSN/AFSL126

PERFORMANCE DATA

Fan Size HP	CFM	.000" RPM	BHP	LwoA♦	.125" RPM	BHP	LwoA♦	.250" RPM	BHP	LwoA♦	.375" RPM	BHP	LwoA♦	.500" RPM	BHP	LwoA♦	.625" RPM	BHP	LwoA♦	.750" RPM	BHP	LwoA♦	.875" RPM	BHP	LwoA♦	1.000" RPM	BHP	LwoA♦	1.125" RPM	BHP	LwoA♦	1.250" RPM	BHP	LwoA♦	1.500 " RPM	BHP	LwoA♦	1.750" RPM	BHP	LwoA♦	1.875" RPM	BHP	LwoA♦	2.000" RPM	BHP	LwoA♦
		Static Pressure																																												
126F .33	1400										570			646			715			780			839			895			947			996			1088			1172			1212			1251	
											.19	66		.24	70		.31	68		.37	70		.44	72		.51	74		.59	75		.67	77		.83	78		.99	80		1.08	78		1.17	79
	1600							505			586			658			725			785			845			900			952			1001			1093			1177			1217			1256	
								.17	62		.23	66		.28	70		.35	68		.42	70		.49	72		.57	74		.65	76		.73	77		.90	78		1.08	80		1.17	79		1.27	79
	1800							528			604			673			736			797			852			906			958			1007			1098			1182			1222				
								.22	64		.28	67		.34	67		.40	69		.47	70		.55	72		.63	73		.72	76		.80	77		.98	79		1.17	81		1.26	79			
	2000							551			624			690			751			808			864			915			964			1012			1104			1188			1228				
								.27	68		.33	68		.40	68		.46	69		.53	71		.62	73		.70	74		.78	75		.87	76		1.07	77		1.26	79		1.36	80			
	2400				537			604			669			730			786			841			892			939			987			1033			1119			1199			1239				
					.33	70		.39	71		.47	71		.55	72		.63	72		.71	73		.79	74		.86	75		.96	76		1.06	77		1.26	79		1.47	80		1.58	81			
126G .50	2800	540			604			663			721			776			830			879			927			974			1018			1060			1141			1220							
		.40	73		.49	74		.56	74		.65	75		.74	75		.83	75		.92	77		1.02	76		1.11	77		1.20	77		1.29	78		1.49	79		1.72	81						
	2900	559			621			679			735			788			841			890			936			982			1027			1069			1147			1226							
		.45	74		.53	75		.62	74		.70	75		.79	76		.89	76		.98	77		1.08	76		1.17	77		1.27	77		1.37	78		1.55	80		1.79	82						
	3000	579			638			695			749			802			853			901			947			991			1035			1077			1155			1231							
		.50	75		.58	76		.67	75		.76	76		.85	76		.95	76		1.05	77		1.15	78		1.24	78		1.35	79		1.44	79		1.64	80		1.86	82						
126H .75	3100	598			656			711			762			815			864			913			958			1000			1044			1086			1164			1237							
		.55	76		.64	76		.73	76		.81	76		.91	76		1.01	78		1.12	78		1.22	79		1.31	78		1.42	80		1.53	81		1.73	80		1.93	82						
	3200	617			674			727			776			828			876			924			969			1011			1053			1095			1173			1244							
		.60	76		.70	76		.79	77		.87	77		.98	78		1.08	78		1.18	78		1.29	79		1.39	79		1.50	80		1.61	81		1.82	81		2.02	82						
	3400	656			710			760			808			856			902			947			992			1034			1073			1113			1190										
		.72	78		.83	77		.92	78		1.02	78		1.12	79		1.22	79		1.33	80		1.45	80		1.56	80		1.67	81		1.78	81		2.01	81									
126J 1.00	3600	694			746			793			840			883			929			972			1015			1056			1096			1133													
		.86	79		.97	79		1.07	79		1.17	80		1.27	80		1.39	81		1.50	81		1.62	81		1.74	81		1.86	81		1.97	82												
126K 1.50	4000	771			818			861			904			945			984			1026			1065			1103																			
		1.17	81		1.30	81		1.41	82		1.53	82		1.64	82		1.75	82		1.88	82		2.00	83		2.13	83																		
126L 2.00	4400	848			891			931			970			1009																															
		1.56	83		1.70	84		1.83	84		1.95	84		2.08	84																														
	4800	926																																											
		2.03	85																																										

Fan Model	HP	RPM Range	Est. Unit Wt. lbs.	Est. Ship Wt. lbs.
126F	.33	505-715	162	283
126G	.50	540-895	165	286
126H	.75	598-958	170	291
126J	1.00	694-1172	177	298
126K	1.50	771-1251	194	315
126L	2.00	848-1244	199	320

The A-weighted sound ratings shown have been calculated per AMCA Standard 301. Values shown are for outlet LwoA sound power levels for Installation Type B: Free Inlet, Ducted Outlet. Ratings include the effects of duct end correction. **♦LwoA shown reflects levels for Model AFSN only. Subtract 1 db to find LwoA for Model AFSL**. Performance certified is for installation Type B: Free inlet, Ducted outlet. Performance ratings include the effects of filters. Power rating (BHP) does not include transmission losses.

AFSN/AFSL150

PERFORMANCE DATA

Fan Size HP	CFM	.000" RPM BHP	.000" RPM LwoA♦	.125" RPM BHP	.125" RPM LwoA♦	.250" RPM BHP	.250" RPM LwoA♦	.375" RPM BHP	.375" RPM LwoA♦	.500" RPM BHP	.500" RPM LwoA♦	.625" RPM BHP	.625" RPM LwoA♦	.750" RPM BHP	.750" RPM LwoA♦	.875" RPM BHP	.875" RPM LwoA♦	1.000" RPM BHP	1.000" RPM LwoA♦	1.125" RPM BHP	1.125" RPM LwoA♦	1.250" RPM BHP	1.250" RPM LwoA♦	1.375" RPM BHP	1.375" RPM LwoA♦	1.500" RPM BHP	1.500" RPM LwoA♦	1.750" RPM BHP	1.750" RPM LwoA♦	1.875" RPM BHP	1.875" RPM LwoA♦
		Static Pressure																													
150G .50	2000					398		470		535																					
						0.17	62	0.23	67	0.30	69																				
	2400					420		486		544		602		654																	
						0.24	65	0.31	69	0.37	71	0.45	73	0.53	73																
	2800			383		446		506		562		614		663		711		756		798											
				0.26	69	0.33	71	0.40	71	0.48	73	0.56	74	0.64	74	0.73	75	0.83	76	0.92	77										
	3200	366		421		477		530		583		632		678		721		765		807		847		885		921					
		0.30	70	0.37	72	0.45	73	0.52	73	0.61	74	0.69	73	0.78	75	0.87	76	0.98	77	1.08	78	1.19	79	1.29	80	1.39	81				
	3600	412		459		510		559		606		653		696		739		779		817		856		894		930		998		1030	
		0.43	73	0.50	74	0.59	76	0.68	76	0.76	76	0.86	74	0.95	76	1.06	77	1.16	78	1.26	79	1.38	80	1.50	81	1.61	81	1.84	83	1.96	84
150H .75	4000	458		500		546		590		634		676		718		758		797		834		870		904		939		1007		1039	
		0.59	75	0.67	76	0.76	77	0.86	78	0.96	74	1.05	75	1.16	77	1.26	78	1.38	79	1.49	80	1.61	80	1.72	82	1.84	82	2.11	84	2.24	84
	4200	480		521		564		606		649		688		730		769		806		843		879		912		945		1012		1044	
		0.68	76	0.76	77	0.86	78	0.96	79	1.06	74	1.16	76	1.27	77	1.38	78	1.49	79	1.61	80	1.74	81	1.85	82	1.97	82	2.24	84	2.38	84
	4400	503		543		583		623		664		703		742		781		817		852		888		921		954		1016		1048	
		0.78	77	0.88	78	0.97	79	1.08	73	1.18	75	1.28	76	1.40	78	1.52	79	1.63	80	1.74	81	1.88	82	2.00	82	2.13	83	2.38	84	2.52	85
150J 1.00	4600	526		564		602		641		680		718		754		792		828		863		896		930		962		1023		1053	
		0.89	78	0.99	79	1.09	80	1.20	74	1.31	75	1.42	77	1.52	78	1.65	79	1.77	80	1.89	86	2.01	82	2.15	82	2.28	83	2.54	84	2.67	85
	4800	549		586		621		660		696		734		768		804		840		874		907		939		971		1032		1061	
		1.02	79	1.12	80	1.22	72	1.34	74	1.45	76	1.57	77	1.67	78	1.79	80	1.92	80	2.05	80	2.17	82	2.30	83	2.44	84	2.72	85	2.85	85
150K 1.50	5000	572		607		640		678		713		749		784		816		852		886		918		949		980		1041		1070	
		1.15	80	1.25	81	1.35	73	1.48	75	1.60	76	1.72	78	1.84	79	1.94	80	2.08	81	2.22	82	2.34	83	2.47	83	2.61	84	2.90	85	3.05	86
	5200	595		629		660		696		731		765		799		831		864		897		930		960		990		1050		1079	
		1.29	82	1.40	72	1.50	74	1.63	75	1.76	77	1.88	78	2.00	79	2.12	80	2.25	85	2.39	82	2.53	83	2.66	83	2.79	84	3.10	86	3.25	86
	5400	617		650		681		715		749		781		815		846		876		909		941		972		1001		1059			
		1.44	82	1.56	72	1.67	74	1.80	76	1.93	77	2.06	79	2.19	80	2.31	81	2.42	82	2.57	83	2.72	83	2.86	84	3.00	84	3.29	86		
	5600	640		672		702		734		767		798		830		862		892		921		953		983		1013					
		1.61	71	1.73	73	1.84	75	1.97	76	2.11	78	2.24	79	2.38	80	2.51	86	2.64	82	2.76	83	2.92	83	3.06	84	3.22	85				
150L 2.00	6000	686		716		744		772		804		834		862		893		922		950											
		1.98	72	2.11	74	2.23	76	2.36	78	2.51	79	2.66	80	2.79	86	2.94	82	3.08	83	3.21	83										
150M 2.00	6500	743		771		797		822		851		879																			
		2.52	74	2.66	76	2.79	78	2.92	79	3.08	80	3.24	81																		

Fan Model	HP	RPM Range	Est. Unit Wt. lbs.	Est. Ship Wt. lbs.
150G	.50	349-495	269	313
150H	.75	430-555	278	338
150J	1.00	468-609	468	492
150K1	1.50	534-678	485	509
150K2	1.50	577-740	484	508
150L1	2.00	600-800	487	511
150L2	2.00	619-817	481	505
150M1	3.00	668-824	518	542
150M2	3.00	757-1079	518	542

AFSN/AFSL181

PERFORMANCE DATA

Fan Size HP	CFM	.000" RPM BHP	.000" RPM LwoA♦	.125" RPM BHP	.125" RPM LwoA♦	.250" RPM BHP	.250" RPM LwoA♦	.375" RPM BHP	.375" RPM LwoA♦	.500" RPM BHP	.500" RPM LwoA♦	.625" RPM BHP	.625" RPM LwoA♦	.750" RPM BHP	.750" RPM LwoA♦	.875" RPM BHP	.875" RPM LwoA♦	1.000" RPM BHP	1.000" RPM LwoA♦	1.250" RPM BHP	1.250" RPM LwoA♦	1.500" RPM BHP	1.500" RPM LwoA♦	1.750" RPM BHP	1.750" RPM LwoA♦
		Static Pressure																							
181J 1.00	4000							368		418															
								0.58	75	0.75	75														
	4500							384		422		468													
								0.74	75	0.85	75	1.06	76												
	5000					371		400		437		472		513											
						0.84	77	0.93	76	1.05	76	1.18	76	1.41	76										
	5500			375		398		423		453		485		517		555		591							
				1.00	79	1.08	77	1.17	77	1.29	77	1.42	77	1.56	76	1.81	78	2.06	78						
181K 1.50	6000	385		406		426		447		471		501		531		559		595							
		1.21	80	1.29	80	1.36	80	1.46	79	1.57	78	1.71	78	1.85	78	1.99	78	2.26	79						
	6500	417		436		455		475		496		517		547		574		600		663					
		1.54	81	1.62	81	1.71	82	1.80	82	1.91	80	2.03	79	2.20	79	2.35	79	2.49	80	3.05	81				
181L 2.00	7000	449		467		484		502		520		541		563		590		615		667		725			
		1.92	83	2.01	83	2.10	83	2.20	82	2.30	82	2.43	81	2.57	81	2.75	81	2.91	81	3.31	82	3.94	82		
	7200	462		479		496		513		531		551		570		596		622		669		727		781	
		2.09	84	2.18	84	2.27	84	2.37	84	2.48	83	2.61	83	2.74	81	2.92	81	3.09	82	3.41	82	4.06	83	4.71	83
181M 3.00	7400	475		492		508		525		542		561		580		603		628		675		729		782	
		2.27	84	2.36	84	2.46	84	2.56	84	2.67	84	2.80	83	2.93	82	3.09	82	3.28	82	3.62	83	4.18	83	4.85	84
	7600	488		504		520		536		553		570		589		609		634		681		730		784	
		2.46	85	2.56	85	2.65	85	2.75	85	2.87	84	2.99	84	3.13	83	3.28	82	3.47	83	3.83	83	4.31	83	4.99	84
	7800	501		517		532		548		564		580		599		617		641		687		732		785	
		2.66	85	2.76	85	2.86	86	2.96	85	3.07	85	3.19	85	3.34	84	3.48	83	3.67	83	4.04	84	4.43	83	5.14	84
	8000	514		529		544		560		575		591		609		627		647		693		736			
		2.87	86	2.97	86	3.07	87	3.18	86	3.29	85	3.41	86	3.55	85	3.70	84	3.87	83	4.27	85	4.62	83		
181N 5.00	9000	578		592		605		619		632		646		661		675		691							
		4.09	89	4.20	89	4.31	88	4.43	88	4.55	89	4.68	88	4.82	89	4.96	88	5.13	87						

Fan Model	HP	RPM Range	Est. Unit Wt. lbs.	Est. Ship Wt. lbs.
181J	1.00	368-422	377	585
181K	1.50	385-513	394	602
181L	2.00	436-559	399	607
181M	3.00	475-615	407	615
181N	5.00	544-785	451	659

The A-weighted sound ratings shown have been calculated per AMCA Standard 301. Values shown are for outlet LwoA sound power levels for Installation Type B: Free Inlet, Ducted Outlet. Ratings include the effects of duct end correction. **♦LwoA shown reflects levels for Model AFSN only. Subtract 1 db to find LwoA for Model AFSL.** Performance certified is for installation Type B: Free inlet, Ducted outlet. Performance ratings include the effects of filters. Power rating (BHP) does not include transmission losses.

PERFORMANCE DATA

Fan Size HP	CFM	Static Pressure .000" RPM BHP	.000" RPM LwoA•	.125" RPM BHP	.125" RPM LwoA•	.250" RPM BHP	.250" RPM LwoA•	.375" RPM BHP	.375" RPM LwoA•	.500" RPM BHP	.500" RPM LwoA•	.750" RPM BHP	.750" RPM LwoA•	1.000" RPM BHP	1.000" RPM LwoA•	1.250" RPM BHP	1.250" RPM LwoA•	1.500" RPM BHP	1.500" RPM LwoA•	1.750" RPM BHP	1.750" RPM LwoA•	2.000" RPM BHP	2.000" RPM LwoA•	2.250" RPM BHP	2.250" RPM LwoA•	2.500" RPM BHP	2.500" RPM LwoA•	2.750" RPM BHP	2.750" RPM LwoA•	3.000" RPM BHP	3.000" RPM LwoA•
200K 1.50	4000							329		374																					
								0.48	71	0.61	71																				
	5000							346		386		459																			
								0.70	72	0.85	72	1.16	74																		
	6000					330		368		404		471		532		589															
						0.83	74	0.99	74	1.15	74	1.50	75	1.88	77	2.27	79														
	6500					345		380		415		480		537		593		645													
						1.00	75	1.16	75	1.34	75	1.72	76	2.09	78	2.52	80	2.94	82												
	7000					361		394		427		488		545		598		649		696											
						1.19	76	1.37	76	1.56	76	1.94	77	2.35	79	2.78	80	3.24	83	3.69	85										
	7500			341		377		409		438		499		554		604		653		700		744									
				1.22	77	1.41	77	1.60	77	1.78	77	2.20	78	2.64	80	3.07	81	3.54	83	4.04	86	4.52	88								
	8000	329		360		393		424		452		510		563		613		658		705		749		790		829					
		1.31	77	1.47	78	1.66	78	1.86	79	2.06	79	2.49	80	2.94	81	3.41	82	3.86	84	4.39	86	4.92	89	5.43	90	5.94	91				
	8500	349		379		410		439		467		521		572		621		667		709		753		794		833		870			
		1.57	79	1.74	79	1.94	80	2.14	80	2.36	80	2.81	81	3.27	82	3.77	83	4.27	85	4.76	87	5.32	89	5.88	90	6.43	91	6.97	92		
200L 2.00	9000	370		398		427		455		482		532		583		630		675		717		758		799		838		875		910	
		1.87	80	2.05	81	2.25	81	2.45	81	2.69	82	3.15	82	3.65	83	4.14	84	4.69	86	5.20	87	5.74	89	6.34	90	6.93	91	7.51	93	8.08	93
	9500	390		417		444		472		498		545		594		640		684		725		764		803		842		879			
		2.20	81	2.39	82	2.59	82	2.81	83	3.05	83	3.53	84	4.06	84	4.56	85	5.12	86	5.68	88	6.23	89	6.81	90	7.44	91	8.06	93		
200M 3.00	10000	411		436		461		488		513		560		606		651		693		734		773		809		846					
		2.56	83	2.76	83	2.96	83	3.21	84	3.44	84	3.96	85	4.49	86	5.04	86	5.58	87	6.19	89	6.77	90	7.34	90	7.96	92				
200N 5.00	11000	452		475		497		522		546		590		631		673		714		752		790									
		3.41	85	3.63	86	3.83	86	4.10	86	4.36	87	4.92	88	5.46	88	6.08	88	6.68	89	7.25	90	7.92	90								
	12000	493		514		535		556		579		621		660		696		736													
		4.43	87	4.67	88	4.90	88	5.16	89	5.45	89	6.02	90	6.65	90	7.23	90	7.92	90												
200P 7.50	13000	534		554		573		591		613		653		691																	
		5.63	90	5.90	90	6.15	91	6.38	91	6.71	92	7.32	91	7.99	91																
	14000	575		594		611		628		647																					
		7.03	92	7.32	93	7.59	93	7.84	93	8.16	94																				

Fan Model	HP	RPM Range	Est. Unit Wt. lbs.	Est. Ship Wt. lbs.
200K	1.50	329-471	573	827
200L	2.00	370-589	578	832
200M	3.00	411-649	586	840
200N	5.00	452-790	630	884
200P	7.50	534-910	649	903

The A-weighted sound ratings shown have been calculated per AMCA Standard 301. Values shown are for outlet LwoA sound power levels for Installation Type B: Free Inlet, Ducted Outlet. Ratings include the effects of duct end correction. **•LwoA shown reflects levels for Model AFSN only. Subtract 1 db to find LwoA for Model AFSL.** Performance certified is for installation Type B: Free inlet, Ducted outlet. Performance ratings include the effects of filters. Power rating (BHP) does not include transmission losses.

For more information on this product contact your sales support.