Belt Drive Centrifugal Ventset
Model QBR

Est. 1938

MIAMI-DADE COUNTY APPROVED

Model QBR is a belt drive centrifugal utility set designed for high efficiency and low sound output. The QBR utility set is a medium duty fan available in nine sizes with capacities up to 23,230 CFM and up to 3 ½" static pressure. Maximum operating temperature of the QBR is 300°F. The QBR's compact design allows quick and easy installation in equipment rooms or on rooftops for restaurant exhaust applications.

2 YEAR COMPREHENSIVE WARRANTY

5 YEAR BEARING & SHAFT WARRANTY

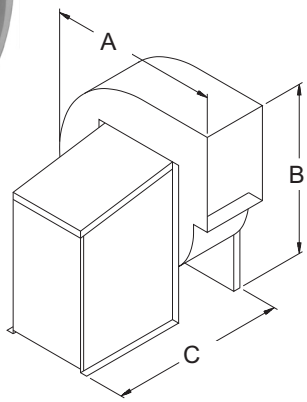

DIMENSIONS						
Fan Model	A	B	C	Inlet Dia.	Outlet L x W	Est. Unit Wt.
QBR100	17.50	23.50	21.19	10.13	10.56 x 7.00	81
QBR137	23.25	32.25	27.44	15.13	14.52 x 10.81	130
QBR161	27.38	36.75	31.57	16.88	17.16 x 12.75	176
QBR200	33.38	45.38	36.50	21.31	21.22 x 15.75	254
QBR245	41.75	55.00	44.00	26.38	26.00 x 19.24	338
QBR270	45.63	56.00	46.00	30.19	28.66 x 21.15	371
QBR300	50.88	65.50	50.07	31.69	31.84 x 23.52	514
QBR330	55.13	68.63	52.44	36.19	35.02 x 25.88	561
QBR365	60.63	76.38	55.19	40.19	38.73 x 29.61	663

Dimensions are shown in inches.
Weights are shown in pounds.

Construction Features

Housing
- Heavy duty steel with lock-formed construction
- Field rotatable to any of seven discharge positions
- Design allows for clockwise or counterclockwise rotation with changing impeller
- Tough gray, charcoal baked enamel finish both inside and outside
- Fully gasketed and bolted access door on fan scroll is standard

Centrifugal Wheel
- Aluminum construction with backward curved hollow airfoil blades (Steel wheel SE fans)
- Non-overloading design for safe operation
- Precision balanced for smooth vibration free operation

Bearings
- Permanently lubricated in an Acme D.S. pillow block housing
- Bearings are resiliently mounted in neoprene rings
- Rated at L_{50} life of 200,000 hours
- **5 year** limited warranty on Acme D.S. pillow block bearings

Drive Assembly
- Adjustable pitch motor sheave
- Cast iron drives sized for 150% of drive horsepower
- Static free, oil and heat resistant belts

Motor and Drive Support Base
- Continuous duty motors mounted on heavy duty galvanized base
- Base adjustable for easy belt take-up and slotted to accept various motor frames without re-drilling

Options/Accessories

- Aluminum Construction
- Inlet Vane Controls
- Dampers
- Weather Cover/Belt Guard
- Housing Drain
- Vibration Isolators
- Inlet Guard
- Outlet Flange
- Spark Resistant Construction (AMCA B)
- Coatings
- Grease Trough
- SE Option U.L. Listed "Power Ventilator for Smoke Control Systems"

Utility Blowers

AMCA CERTIFIED RATINGS SOUND AND AIR PERFORMANCE

Acme Engineering & Manufacturing Corporation certifies that the models shown herein are licensed to bear the AMCA seal. The ratings shown are based on tests and procedures performed in accordance with AMCA Publication 211 and AMCA Publication 311 and comply with the requirements of the AMCA Certified Ratings Program.

U.L. 762 Listed

Consult your Acme representative for availability.

PERFORMANCE DATA

Fan Model	FEG	RPM	HP	Sones @ .250"	CFM vs. Static Pressure .250" CFM	.250" BHP	.375" CFM	.375" BHP	.500" CFM	.500" BHP	.625" CFM	.625" BHP	.750" CFM	.750" BHP	1.000" CFM	1.000" BHP	1.250" CFM	1.250" BHP	1.500" CFM	1.500" BHP	1.750" CFM	1.750" BHP	2.000" CFM	2.000" BHP	2.500" CFM	2.500" BHP	3.000" CFM	3.000" BHP	3.500" CFM	3.500" BHP
QBR100E1	85	1430	1/4	9.0	513	0.04	410	0.04	304	0.04																				
		2085		15.1	857	0.13	809	0.13	761	0.13	689	0.13	619	0.13	483	0.12	316	0.11												
QBR100E2		1645	1/4	10.4	630	0.06	555	0.07	470	0.06	379	0.06	275	0.06																
		2465		18.8	1047	0.21	1005	0.22	964	0.22	923	0.22	880	0.22	751	0.22	650	0.21	516	0.20	372	0.18								
QBR100F		2100	1/3	13.4	865	0.13	817	0.13	769	0.14	699	0.14	629	0.13	495	0.13	331	0.12												
		2850		25	1235	0.32	1198	0.33	1163	0.33	1127	0.34	1092	0.34	1019	0.34	903	0.34	814	0.33	715	0.32	599	0.31						
QBR100G		2445	1/2	19.1	1037	0.21	995	0.21	954	0.21	913	0.21	866	0.22	738	0.21	634	0.21	499	0.20	351	0.18								
		3165		31	1387	0.44	1354	0.45	1321	0.45	1289	0.46	1257	0.46	1193	0.46	1124	0.47	1020	0.46	934	0.46	860	0.45	652	0.43				
QBR137F	80	960	1/3	9.4	1184	0.10	1014	0.10	573	0.08																				
		1440		15.9	2012	0.30	1921	0.31	1826	0.32	1722	0.33	1614	0.34	1364	0.34														
QBR137G		1150	1/2	13.1	1524	0.16	1401	0.17	1263	0.17	1106	0.17	546	0.13																
		1630		18.2	2318	0.43	2245	0.45	2162	0.46	2078	0.47	1989	0.48	1795	0.49	1572	0.49	794	0.36										
QBR137H		1395	3/4	15.2	1939	0.28	1843	0.29	1745	0.30	1634	0.30	1518	0.31	1027	0.28														
		1865		21	2691	0.63	2628	0.65	2564	0.67	2491	0.68	2417	0.69	2263	0.72	2096	0.73	1905	0.73	1526	0.69	802	0.52						
QBR137J		1630	1	18.2	2318	0.43	2245	0.45	2162	0.46	2078	0.47	1989	0.48	1795	0.49	1572	0.49	794	0.36										
		2095		24	3052	0.88	2996	0.91	2940	0.93	2883	0.95	2818	0.96	2688	0.99	2549	1.02	2400	1.03	2239	1.04	2065	1.04	968	0.76				
QBR137K		1835	1 ½	21	2643	0.60	2579	0.62	2513	0.64	2439	0.65	2364	0.66	2205	0.69	2034	0.70	1836	0.70	1299	0.62								
		2370		29	3480	1.27	3431	1.29	3381	1.31	3332	1.34	3282	1.36	3169	1.40	3054	1.43	2936	1.46	2805	1.48	2673	1.50	2373	1.51	1513	1.27		
QBR137L		2125	2	24	3099	0.92	3044	0.94	2988	0.96	2933	0.98	2869	1.00	2741	1.03	2607	1.06	2460	1.08	2305	1.09	2134	1.09	1151	0.85				
		2610		35	3852	1.68	3807	1.71	3762	1.73	3717	1.76	3672	1.79	3579	1.83	3475	1.87	3370	1.91	3266	1.95	3147	1.97	2908	2.01	2631	2.01	1923	1.80
QBR161F	80	720	1/3	7.8	1426	0.10	908	0.09																						
		1080		10.4	2505	0.30	2362	0.32	2215	0.33	2062	0.34	1833	0.34																
QBR161G		895	1/3	9.0	1968	0.18	1789	0.19	1565	0.19	855	0.15																		
		1215		12.3	2880	0.42	2759	0.44	2632	0.46	2500	0.47	2365	0.48	1948	0.47														
QBR161H		1065	3/4	10.1	2462	0.29	2318	0.31	2167	0.32	2012	0.33	1754	0.32																
		1430		16.3	3463	0.67	3368	0.70	3264	0.72	3156	0.74	3048	0.75	2819	0.78	2550	0.79	1717	0.68										
QBR161J		1105	1	10.9	2576	0.32	2437	0.34	2294	0.35	2145	0.36	1962	0.36	839	0.25														
		1550		18.0	3784	0.85	3697	0.87	3607	0.90	3508	0.92	3408	0.94	3204	0.97	2992	1.00	2709	1.00	1903	0.88	1037	0.65						
QBR161K		1315	1 ½	14.2	3153	0.53	3046	0.55	2929	0.57	2812	0.59	2688	0.60	2438	0.62	1666	0.54												
		1770		21	4368	1.24	4291	1.27	4215	1.30	4138	1.33	4051	1.35	3877	1.40	3699	1.44	3513	1.47	3327	1.50	3026	1.49	1532	1.10				
QBR161L		1550	2	18.0	3784	0.85	3697	0.87	3607	0.90	3508	0.92	3408	0.94	3204	0.97	2992	1.00	2709	1.00	1903	0.88	1037	0.65						
		1990		27	4947	1.75	4879	1.78	4811	1.81	4742	1.85	4674	1.88	4522	1.94	4367	1.99	4212	2.04	4046	2.07	3881	2.10	3440	2.12	2134	1.74		
QBR161M		1840	3	23	4553	1.39	4479	1.42	4405	1.45	4331	1.48	4252	1.51	4084	1.56	3917	1.61	3739	1.64	3560	1.66	3381	1.69	2161	1.43				
		2260		34	5653	2.53	5593	2.57	5533	2.61	5473	2.65	5413	2.69	5293	2.76	5158	2.83	5021	2.89	4885	2.95	4745	3.00	4454	3.07	4162	3.13	3574	3.05
QBR200G	75	595	1/2	7.0	2123	0.16	1737	0.16																						
		880		15.9	3659	0.48	3437	0.49	3219	0.51	3007	0.52	2739	0.52	1444	0.41														
QBR200H		685	3/4	8.2	2623	0.24	2349	0.25	1991	0.25	997	0.18																		
		1010		17.6	4309	0.70	4129	0.73	3935	0.75	3745	0.77	3560	0.78	3118	0.79	1985	0.67												
QBR200J		735	1	9.1	2895	0.29	2636	0.30	2354	0.31	1822	0.29																		
		1105		22	4775	0.91	4622	0.94	4445	0.96	4268	0.98	4094	1.00	3757	1.03	3310	1.04	2147	0.87										
QBR200K		945	1 ½	16.0	3988	0.58	3786	0.60	3579	0.62	3381	0.64	3183	0.65	2637	0.65														
		1270		28	5572	1.35	5440	1.39	5306	1.43	5152	1.45	4998	1.48	4695	1.53	4401	1.56	4056	1.58	3639	1.57	2382	1.30						
QBR200L		1080	2	21	4653	0.85	4493	0.88	4312	0.90	4131	0.92	3955	0.94	3610	0.97	3125	0.97	1799	0.76										
		1385		34	6123	1.74	6002	1.78	5880	1.82	5752	1.86	5611	1.89	5329	1.94	5054	1.99	4785	2.02	4475	2.05	4093	2.04	2197	1.56				
QBR200M		1230	3	27	5380	1.23	5243	1.27	5099	1.30	4941	1.33	4782	1.35	4472	1.39	4169	1.43	3768	1.43	3051	1.35	1846	1.07						
		1585		43	7073	2.58	6967	2.63	6861	2.67	6755	2.72	6648	2.76	6404	2.83	6157	2.90	5913	2.96	5678	3.00	5443	3.04	4843	3.06	3471	2.73		
QBR245H	71	540	3/4	8.2	3646	0.32	3161	0.33	2153	0.29																				
		733		13.9	5533	0.77	5187	0.79	4836	0.81	4479	0.82	4089	0.82	2374	0.66														
QBR245J		627	1	10.6	4516	0.49	4106	0.51	3689	0.52	3151	0.50	1983	0.42																
		807		15.2	6202	1.02	5911	1.04	5596	1.06	5276	1.08	4951	1.09	4221	1.09	2537	0.88												
QBR245K		725	1 ½	13.7	5459	0.75	5107	0.77	4752	0.78	4391	0.79	3989	0.79	2299	0.64														
		924		19.2	7243	1.50	7015	1.54	6750	1.57	6474	1.59	6197	1.61	5631	1.64	4998	1.64	3357	1.38										
QBR245L		838	2	16.4	6480	1.13	6210	1.16	5906	1.18	5600	1.20	5288	1.22	4616	1.22	2883	1.00												
		1017		19.8	8060	1.98	7853	2.03	7641	2.07	7391	2.09	7140	2.12	6633	2.16	6119	2.19	5536	2.19	4249	1.98	3173	1.77						
QBR245M		994	3	19.0	7859	1.86	7647	1.90	7422	1.94	7166	1.96	6910	1.98	6389	2.02	5862	2.05	5242	2.04	3493	1.69								
		1164		25	9338	2.94	9156	3.00	8975	3.04	8794	3.10	8579	3.12	8141	3.18	7700	3.23	7250	3.26	6797	3.30	6261	3.28	3801	2.66				
QBR245N		1103	5	23	8809	2.52	8618	2.56	8427	2.61	8219	2.65	7988	2.68	7526	2.73	7054	2.76	6580	2.80	6036	2.79	5048	2.63						
		1380		35	11194	4.86	11041	4.92	10889	4.98	10736	5.04	10583	5.10	10251	5.19	9882	5.26	9513	5.32	9139	5.38	8760	5.42	7985	5.49	7081	5.44	4523	4.43

Performance certified is for Installation Type B: Free Inlet, Ducted Outlet. Power rating (BHP) does not include transmission losses.
Performance ratings do not include the effects of appurtenances (accessories).
The sound ratings shown are loudness values in fan sones at 1.5 m (5 ft) in a hemispherical free field calculated per AMCA Standard 301.
Values shown are for Installation Type B: Free Inlet hemispherical sone levels.

MIAMI-DADE COUNTY APPROVED

PERFORMANCE DATA

Fan Model	FEG	RPM	HP	Sones @ .250"	CFM vs. Static Pressure .250" CFM	.250" BHP	.375" CFM	.375" BHP	.500" CFM	.500" BHP	.625" CFM	.625" BHP	.750" CFM	.750" BHP	1.000" CFM	1.000" BHP	1.250" CFM	1.250" BHP	1.500" CFM	1.500" BHP	1.750" CFM	1.750" BHP	2.000" CFM	2.000" BHP	2.500" CFM	2.500" BHP	3.000" CFM	3.000" BHP	3.500" CFM	3.500" BHP
QBR270H	67	425	3/4	7.7	3744	0.27	2201	0.24																						
		600		11.6	6158	0.71	5754	0.74	5276	0.77	4484	0.76	3078	0.67																
QBR270J		445	1	7.9	4078	0.31	2848	0.30																						
		660		14.1	6927	0.92	6561	0.96	6194	1.00	5714	1.03	4997	1.02	2750	0.83														
QBR270K		530	1 ½	9.3	5239	0.50	4746	0.53	3800	0.52	2331	0.44																		
		745		16.6	7992	1.30	7673	1.35	7348	1.39	7023	1.44	6635	1.47	5229	1.43	3211	1.20												
QBR270L		590	2	11.2	6028	0.67	5618	0.71	5105	0.73	4167	0.71	2741	0.61																
		840		20	9151	1.82	8885	1.89	8597	1.94	8310	1.99	8022	2.05	7316	2.12	6071	2.07	4066	1.79										
QBR270M		745	3	16.6	7992	1.30	7673	1.35	7348	1.39	7023	1.44	6635	1.47	5229	1.43	3211	1.20												
		960		23	10596	2.67	10371	2.76	10134	2.83	9882	2.89	9630	2.95	9126	3.06	8535	3.15	7762	3.18	6111	2.98	4395	2.61						
QBR270N		905	5	22	9936	2.26	9697	2.33	9435	2.39	9167	2.45	8900	2.51	8366	2.62	7590	2.66	6167	2.55	4314	2.22	3338	2.09						
		1120		30	12501	4.18	12308	4.27	12116	4.37	11919	4.46	11703	4.53	11271	4.67	10839	4.80	10408	4.94	9829	5.01	9166	5.05	6433	4.58	4316	3.99		
QBR300J	71	415	1	7.6	5170	0.40	4361	0.42	2158	0.31																				
		555		11.7	7709	0.90	7204	0.94	6706	0.98	6215	1.01	5118	0.97																
QBR300K		500	1 ½	10.7	6734	0.67	6176	0.71	5631	0.74	4375	0.70	2131	0.50																
		640		14.9	9177	1.34	8740	1.39	8303	1.44	7869	1.49	7443	1.53	5881	1.49														
QBR300L		545	2	11.2	7533	0.85	7020	0.90	6514	0.93	5926	0.95	4651	0.89																
		700		17.2	10181	1.73	9795	1.79	9395	1.85	8996	1.90	8600	1.95	7821	2.03	5817	1.87												
QBR300M		575	3	12.5	8058	0.99	7571	1.04	7087	1.08	6613	1.11	5780	1.10	2207	0.72														
		790		21	11666	2.45	11344	2.53	10991	2.59	10637	2.65	10283	2.71	9582	2.82	8892	2.91	7409	2.81	4718	2.30								
QBR300N		765	5	20	11256	2.23	10918	2.31	10552	2.36	10186	2.42	9821	2.48	9101	2.58	8197	2.62	6278	2.42	3389	1.83								
		960		29	14430	4.30	14165	4.40	13900	4.49	13620	4.58	13329	4.65	12746	4.80	12163	4.95	11591	5.07	11023	5.17	10122	5.17	6528	4.39				
QBR300P		895	7 ½	26	13378	3.51	13094	3.60	12806	3.68	12494	3.75	12181	3.82	11556	3.96	10937	4.08	10328	4.18	9372	4.18	7857	4.00						
		1101		37	16695	6.42	16464	6.53	16233	6.64	16001	6.75	15767	6.85	15259	7.02	14751	7.19	14243	7.36	13735	7.53	13240	7.66	12202	7.88	9874	7.52	5862	5.92
QBR330J	67	330	1	5.4	5026	0.35	2335	0.27																						
		460		9.1	8509	0.89	7818	0.94	6899	0.96	5031	0.89	2965	0.70																
QBR330K		390	1 ½	7.0	6756	0.56	5607	0.58	3141	0.47																				
		545		12.7	10525	1.42	9969	1.48	9386	1.54	8658	1.58	7637	1.58	4118	1.25														
QBR330L		460	2	9.1	8509	0.89	7818	0.94	6899	0.96	5031	0.89	2965	0.70																
		595		13.9	11675	1.82	11191	1.89	10657	1.96	10123	2.03	9423	2.06	7165	1.98	3885	1.52												
QBR330M		495	3	10.9	9358	1.09	8717	1.14	7972	1.18	6859	1.18	4955	1.07																
		665		18.2	13261	2.49	12833	2.58	12387	2.66	11909	2.74	11431	2.81	10206	2.89	7996	2.76	4920	2.26										
QBR330N		605	5	14.5	11903	1.90	11432	1.98	10907	2.05	10382	2.12	9726	2.16	7712	2.12	4389	1.68												
		810		26	16493	4.40	16141	4.51	15790	4.61	15438	4.72	15062	4.81	14277	5.00	13422	5.15	12362	5.23	10646	5.11	8199	4.73						
QBR330P		770	7 ½	24	15607	3.80	15237	3.90	14868	4.00	14492	4.10	14080	4.19	13254	4.36	12222	4.46	10767	4.44	8435	4.17	5787	3.53						
		925		31	19021	6.48	18714	6.60	18406	6.72	18098	6.84	17791	6.96	17140	7.19	16453	7.40	15766	7.60	14882	7.72	13954	7.81	10369	7.28	6183	5.78		
QBR365K	71	320	1 ½	6.3	6774	0.49	5274	0.50																						
		460		13.7	11244	1.36	10556	1.41	9838	1.46	9087	1.50	7861	1.48																
QBR365L		380	2	10.4	8759	0.79	7881	0.83	6654	0.84	3841	0.67																		
		515		15.2	12902	1.87	12285	1.93	11671	2.00	11023	2.05	10352	2.09	8038	2.02														
QBR365M		460	3	13.7	11244	1.36	10556	1.41	9838	1.46	9087	1.50	7861	1.48																
		595		19.9	15285	2.81	14728	2.91	14196	2.98	13664	3.06	13127	3.13	11966	3.23	10209	3.20	6369	2.63										
QBR365N		545	5	17.0	13801	2.19	13210	2.27	12629	2.34	12045	2.40	11411	2.45	9813	2.48	5983	2.04												
		700		28	18352	4.49	17871	4.61	17395	4.72	16943	4.81	16491	4.90	15587	5.07	14607	5.19	13620	5.31	11864	5.21	8539	4.53						
QBR365P		635	7 ½	23	16460	3.39	15929	3.50	15427	3.58	14929	3.66	14431	3.74	13375	3.86	12287	3.97	10275	3.86	6373	3.11								
		795		34	21088	6.50	20664	6.63	20241	6.77	19820	6.90	19422	7.00	18626	7.20	17830	7.40	16979	7.55	16110	7.68	15145	7.77	10662	6.92				
QBR365R		700	10	28	18352	4.49	17871	4.61	17395	4.72	16943	4.81	16491	4.90	15587	5.07	14607	5.19	13620	5.31	11864	5.21	8539	4.53						
		870		45	23230	8.46	22843	8.61	22456	8.75	22069	8.90	21685	9.04	20958	9.26	20230	9.48	19503	9.70	18728	9.87	17934	10.01	15952	10.12	11601	9.05		

Performance certified is for Installation Type B: Free Inlet, Ducted Outlet. Power rating (BHP) does not include transmission losses.
Performance ratings do not include the effects of appurtenances (accessories).
The sound ratings shown are loudness values in fan sones at 1.5 m (5 ft) in a hemispherical free field calculated per AMCA Standard 301.
Values shown are for Installation Type B: Free Inlet hemispherical sone levels.

For more information on this product call your sales support.